TOSHIBA

TRIODE
8T85RB
Forced Air Cooling

Uses(用途)	Industrial RF Heat Equipment (工業用高周波加熱装置)
Frequency(周波数)	45 MHz(Max.)
DC Plate Voltage(陽極電圧)	12 kV (Max.)
Plate Dissipation(陽極損失)	10 kW (Max.)
Output Power Class C (陽極出力)	17.5 kW

GENERAL DATA (一般定格)

ELECTRICAL (電気的定格) :

Filament : Thoriated Tungusten (ﾌｨﾗﾒﾝﾄ : ﾄﾘｳﾑ･ﾀﾝｸﾞｽﾃﾝ)
- Voltage (電圧) ..... 12 V
- Current (電流) ..... 40 A

Transconductance (Ib=1.0A) (相互ｺﾝﾀﾞｸﾀﾝｽ) ..... 11 mS

Amplification Factor (増幅率) ..... 21 —

Interelectrode Capacitances (電極間静電容量) :
- Grid — Plate (ｸﾞﾘｯﾄﾞ—陽極) ..... 16 pF
- Grid — Filament (ｸﾞﾘｯﾄﾞ—ﾌｨﾗﾒﾝﾄ) ..... 22 pF
- Plate—Filament (陽極—ﾌｨﾗﾒﾝﾄ) ..... 0.9 pF

Frequency for Maximum Ratings ..... 45 MHz
(使用可能な最大周波数)

MECHANICAL (機械的定格) :

Overall Dimensions (外形寸法) :
- Length (全長) ..... 306 mm
- Diameter (Max.) (最大部直径) ..... 204 mm
- Mass (質量) ..... 9 kg
- Mounting Position (使用位置) ..... Vertical Plate Down (垂直陽極下)

Cooling(冷却):

Plate : Forced Air Cooling (陽極:強制空冷)
- Minimum Air Flow (最小風量) ..... 22 m^3/min
- Minimum Static Pressure Loss (最小静圧) ..... 40 mm Water
- Maximum Radiator Temperature (最高ﾗｼﾞｴｰﾀ温度) ..... 250 ℃
- Maximum Incoming Air Temperature (流入空気最高温度) ..... 40 ℃
- Maximum temperature on Filament and Grid Seals ..... 250 ℃
  (ﾌｨﾗﾒﾝﾄ及びｸﾞﾘｯﾄﾞ封止部最高温度)

Recommended Air Jacket (推奨空冷絶縁筒) ..... TOSHIBA VT-25004

★The information contained herein is presented only as guide for the applications of our products. No responsibility is assumed by TOSHIBA ELECTRON TUBES & DEVICES CO.,LTD. for any infringements of patents or other rights of the third parties which may result from its use. No license is granted by implication or otherwise under any patent or patent rights of TOSHIBA ELECTRON TUBES & DEVICES CO.,LTD. or others.
★The information contained herein may be changed without prior notice. It is therefore advisable to contact TOSHIBA ELECTRON TUBES & DEVICES CO.,LTD. before proceeding with the design of equipment incorporating this product.

WVS-TECHNOLOGY

RADIO FREQUENCY POWER AMPLIFIER AND OSCILLATOR
-Class C Telegraphy-
（無線周波電力増幅ならびに発振 C級電信）

ABSOLUTE MAXIMUM RATINGS（絶対最大定格）：

	Continuous (連続使用)	Intermittent[1] (間欠使用)	
Frequency（周波数）	45	45	MHz
DC Plate Voltage（陽極直流電圧）	12	12	kV
DC Grid Voltage（グリッド直流電圧）	−2000	−2000	V
DC Plate Current（陽極直流電流）	2.5	3.0	A
DC Grid Current（グリッド直流電流）	300	400	mA
Plate Dissipation（陽極損失）	10	10	kW
Grid Dissipation（グリッド損失）	250	300	W

TYPICAL OPERATION （動作例）：

	Continuous (連続使用)		Intermittent[1] (間欠使用)	
DC Plate Voltage（陽極直流電圧）	8	11	11.5	kV
DC Plate Current（陽極直流電流）	2.0	2.3	2.8	A
DC Grid Current（グリッド直流電流）	220	250	270	mA
Grid Resistance（グリッド抵抗）	4.0	4.5	5.0	kΩ
Plate Output Power（陽極出力）	12	17.5	23.5	kW

Note：

(1) Values for intermittent service are those for 30 seconds of operating time and 50% of duty Factor. （間欠使用は動作時間 30 秒、デューティサイクル 50%の場合です。）

AVERAGE CONSTANT CURRENT CHARACTERISTICS
（平均定電流特性）

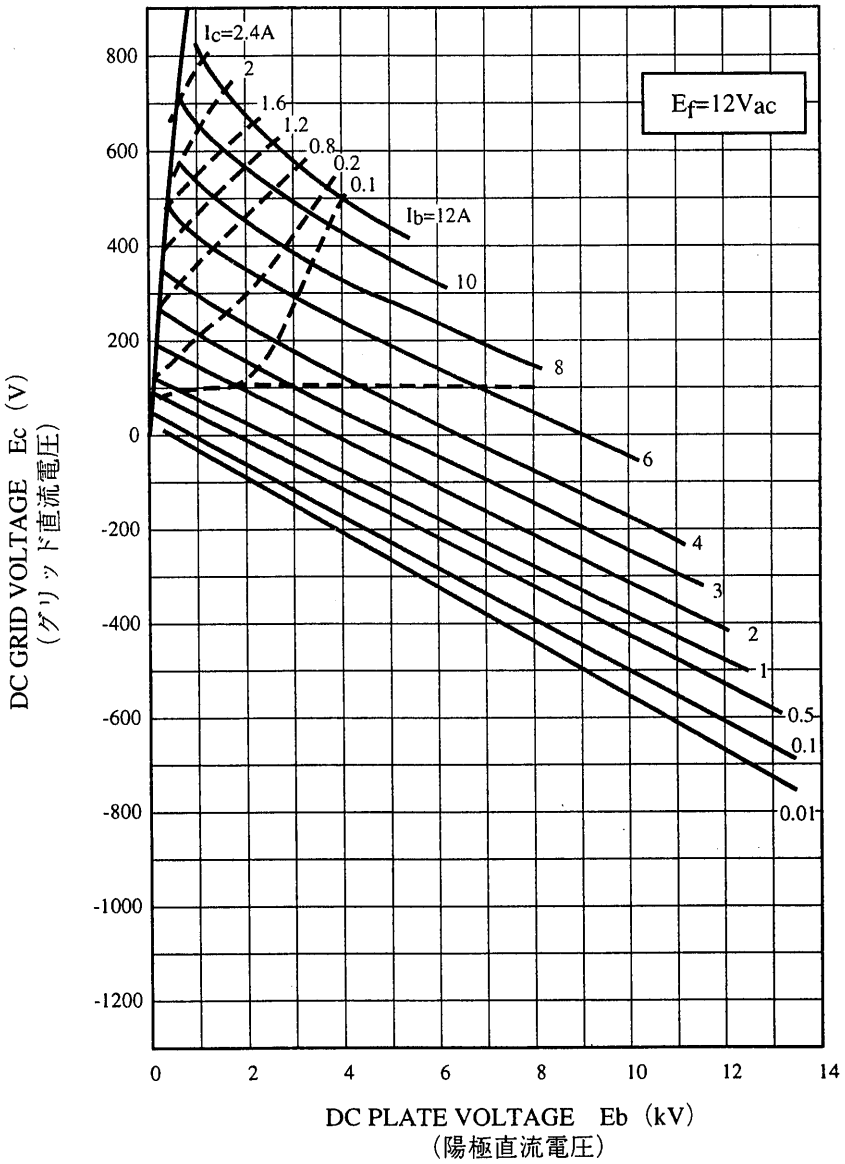

DIMENSIONAL OUTLINE
(外形図)

Unit : mm
(単位)

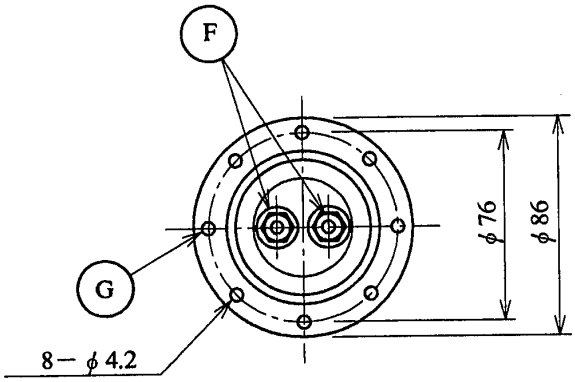

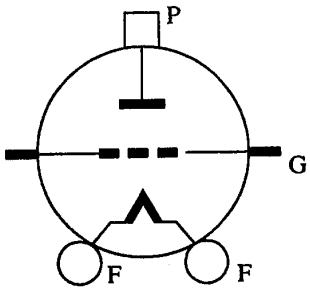

P ：Plate（陽極）
G ：Grid（グリッド）
F ：Filament（フィラメント）

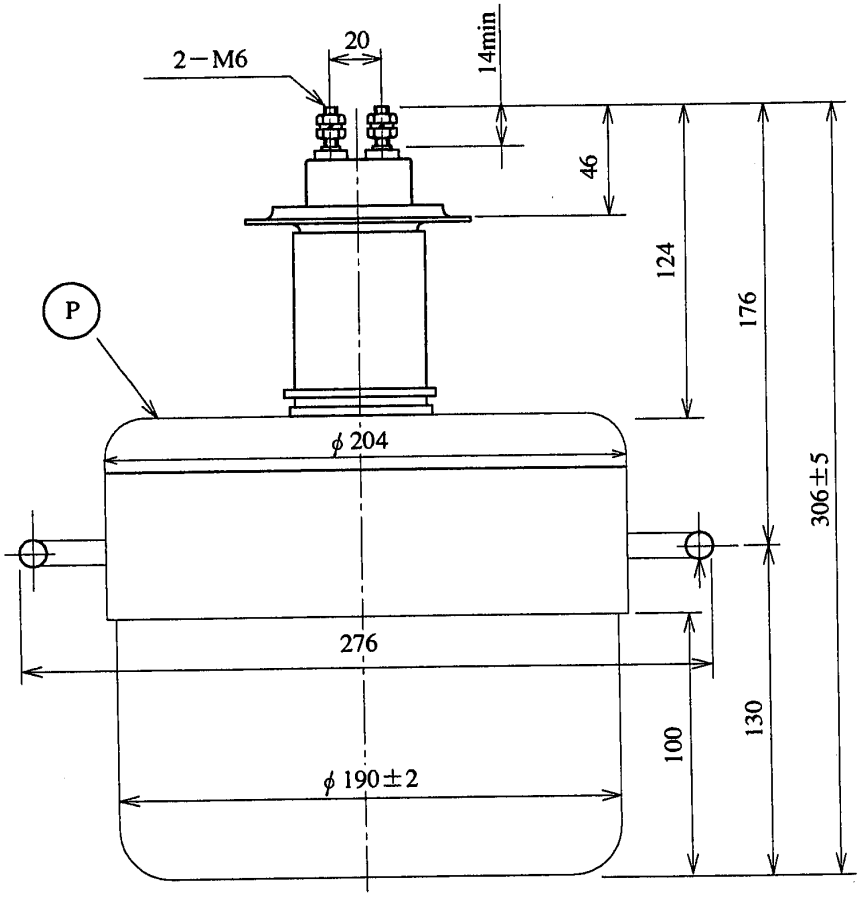

Operation and Handling

Since the power consumption of transmitting tubes is generally high, the voltages applied to each electrodes are high and the temperature of the electrodes rises accordingly. Therefore, incorrect operation may result in personal injury. In addition, it is difficult to determine the mechanical design strength of a transmitting tube from its external appearance.
Therefore, all personnel who work with transmitting tubes must have a thorough understanding of correct operating procedures to prevent damage and must handle such tubes with extreme care.

System designers and personnel involved in performing work are responsible for ensuring worker safety.

1. Applications and objectives
   (1) This product is intended for use in industrial equipment only. It is not to be sold to or used by the general public.
   (2) This product is not designed or intended for use in combination with equipment in which malfunction or incorrect operation could lead to personal injury or death, Such use is strictly prohibited.
   (3) Refer to delivery specifications and engineering information issued by Toshiba to ensure safe operation of this product.

2. Ambient conditions
   (1) Store this product in a dry location (relative humidity < 60 %). Do not store this product in a location where the temperature or humidity may change rapidly because condensation may form on the surface of the product.
   (2) A filter should be used because accumulated dust will lead to deterioration of withstand voltage and may generate smoke or catch fire.

3. Precaution against incorrect or inappropriate operation
   (1) If this product is operated with an excessively high voltage or current, X-rays exceeding the standard may be generated. Never use this product with a voltage or current exceeding the rated values.
   (2) Prior consultation with Toshiba is required if this product is to be used under conditions other than those specified or if it is used for a new type of equipment.
   (3) Before using this product, determine whether or not it can be used for industrial heating applications.
   (4) Only qualified engineers are permitted to use, assemble, maintain, or check this product. Other personnel are prohibited from handling this product.

4. Precautions for operation and maintenance
   To ensure that the end user is aware of the safety precautions, include the descriptions given in the safety precautions in the operations manual provided with the equipment or take other appropriate actions.

4.1 High voltage
The voltage applied to the electrodes of the power tube can exceed 10kV, which is deadly, and the equipment must be designed properly and operating precautions must be followed.

(1) Safety features to be incorporated in the design
*The following safety features should be incorporated in the system design:
The equipment must be designed to prevent personnel from coming into contact with high circuit.
*Interlock switches must be provided on access doors, so that when these are opened for inspection or replacement of the tube, power supply is turned off and high-voltage capacitors are discharged.
*The power supply cannot be turned on again unless the access boor is fully closed.

(2) Safety precautions for inspection and replacement to tube
It is preferable to request that the system manufacturer send an engineer to inspect and replace the tube; if this is not possible, two or more qualified persons well-trained in electrical work can perform the inspection and replacement. In either case, all power supplies must be turned off before beginning any service procedure, and parts being inspected or replaced must be grounded with aground bar.

4.2 High temperature
Although a cooling system is used, the electrode terminals are very hot both during and after operation. Do not touch the tube just after turn off the power; wait until the temperature decreases enough not to be dangerous.

4.3 X-ray radiation

At voltage over 10kV, X-rays are generated. X-ray radiation at voltages up to 20kV~30kV is soft X-ray with low penetration, therefore, it is absorbed and contained by the metal cabinet and by the glass bulb and metal parts of the tube. However, the intensity of the radiation could become high enough to leak to the outside, adequate evaluation of X-ray radiation for personal protection is necessary when designing the equipment.

4.4 Operating the tube

When the tube is operated for the first time or after long intermission, it is desirable to preheat for more than 15 minutes and to increase the high voltage gradually.

This operation is effective to improve and stabilize the vacuum level and ensure stable operation.

4.5 Mounting and demounting the tube

The mechanical strength of power tubes is actually fragile, even appear strong.

The internal structure of the electrodes, especially Thoriated filament, is easily affected by shock and vibration. The mechanical strength of internal structure is same for ceramics envelope tube as that of glass envelope tube. Therefore, careful handling is necessary for installing these tubes.

When mounting or demounting tube in the socket of equipment, special care should be taken not to subject the tube to excess shock and vibration, such as trying to mount it into or remove it from a tight socket or by touching the tube while it is hot.

This tube should be held vertically by holding anode or anode flange, and not to apply excess force to the terminals, etc.

4.6 Connecting the tube

The lead wires connected to the tube must be protected from vibration and thermal expansion and cooling.

There must be no force applied directly to the sealed parts.

If the connecting socket is of the wrong size, it may cause improper electric contact, fall off during operation, damage the tube during mounting and demounting, cause degrading the cooling effect. When tightening terminals, do not apply excessive force to the seat parts. When connecting the tubes, do not solder the leads nor attempt connection by winding bare wires to the terminal directly as this is very dangerous. Contact Toshiba for the requirements of the proper accessory parts such as sockets, cap, etc.

4.7 Maintenance and inspection

We recommend that a record be kept for the operating conditions, and that periodic maintenance checks be performed to ensure stable operation and maximum operation life of the tube. Record voltage, current and electrode temperature, and the cause of fluctuations, if any.

Check the operation of the safety devices such as the overload relay, water relay and air flow relay.

Confirm that the tube is mounted correctly.

Attention should also be paid to environmental conditions, as high humidity and dust may damage the external insulation of the rube.

4.8 Storage

When the tube is to be stored for a long time, pack it in the box and store the box in a location with less vibration and low humidity, oriented correctly as indicated.

Vibration may break the filament or the tube; high humidity may damage the insulation of the valve base and cause poor electric contact. Do not place the bare tube directly on the floor, even when remounting the tube.

4.9 Transportation

When the tube is to be transported, pack it taking the original packing method.

Any other method may damage the tube.

Precaution for Safe Operation and Handling

This operation manual describes the important information for preventing injury to personnel at manufactures employing this electron tube, users, and other personnel, as well as for preventing property loss and for ensuring safe operation.
Fully understand the meanings of following indications and symbols before reading this manual and observe all precautions for safe operation.
Keep this operation manual near the electron tube for immediate reference.

[Description of indications]

Indication	Meaning
⚠ WARNING	Indicates a potentially hazardous situation which, if not avoided, could result in death or serious injury.
⚠ CAUTION	Indicates a potentially hazardous situation which, if not avoided, may result in minor or moderate injury or property damage.

*1: The phase “minor or moderate injury” means personal injury, burn, electrical shock, etc. that does not require inpatient medical care.
*2: The term “property damage” means extended damage such as damage to facilities or materials.

[Description of symbols]

Symbol	Meaning
⃠	“DON’T” : Indicates a prohibition (something that you must NOT do). Details are described in words near the symbol.
❗	“DO” : Indicates a compulsion (something that you must do). Details are described in words near the symbol.

[Disclaimer]

■Toshiba will not be held responsible for associated damage (loss of business profits, interruption of business, etc.) resulting from the operation or non-availability of the equipment.

■Toshiba will not be held responsible for damage caused by natural calamities, fires, acts by the third parties, accidents, intentional or accidental mis-operation, and operation under abnormal conditions.

■Toshiba will not be held responsible for damage caused by non-observance of the ratings of this equipment.

■Toshiba will not be held responsible for damage caused by malfunctions of the system in which this equipment is incorporated.

[Restrictions on use]

■This equipment is not designed or manufactured for use in combination with systems that include components that directly affect the maintenance or loss of human life(*1). Do not use this equipment for such systems.

*1 : Systems / equipment directly affecting the maintenance or loss of human life include the following:
・Life-support systems, surgical equipment, and diagnostic equipment

■If this equipment is used in combination with systems (*2) that are related to public safety or maintenance of essential public services, special procedures (*3) are required for the operation, maintenance, and management of the systems. Contact Toshiba in advance.

*2 : Systems related to public safety or maintenance of essential public services include the following:
・The main control systems of nuclear power plants, safety protection systems for unclear facilities, and other important systems for safety
・Mass-transit and air traffic control systems

*3 : Special procedures refers to the development of safe systems (fool-proof, fail-safe, and advanced design, etc.) in close cooperation with Toshiba engineers.

[Manufacturing, installation, and operation of the equipment]

The manufacturing, installation, and operation of systems which incorporate this equipment and transmit electromagnetic waves should be performed in compliance with all applicable regulations related to electromagnetic waves.

	⚠ WARNING
DON'T DISASSEMBLE	■**Do not disassemble, modify, or repair the equipment.** There is danger of irradiation, fire, electric shock, or burns due to high-frequency electromagnetic wave.
DOs	■**Provide a protective fence preventing contact with the high-voltage section.** If you approach or touch the electrode section or lead wires while power is supplied, there is danger of death or injury due to electric shock. The protective fence should be equipped with safety switches that shut down the high-voltage power supply as soon as a door or panel is opened. ■**Install the waveguide and output flange sections securely, so as to prevent electromagnetic wave leakage.** There is danger of irradiation, fire, or burns due to high-frequency electromagnetic waves. ■**Keep the area around the equipment free of flammable materials and keep the equipment free of dust.** Otherwise, there is danger of fire. ■**Provide an X-ray protective shield if an X-ray dose exceeding 77.4 μ C/kg・h is output.** Otherwise, there is danger of X-ray exposure and the consequent health, related problems. The protective shield should be equipped with safety switches that shut down the high-voltage power supply as soon as a door or panel is opened. ■**Provide a safety device which prevents overcurrents due to shorting between the electrode terminals etc.** Otherwise, the connection cables may be heated and there is danger of fire. ■**Before performing preventive maintenance work, turn OFF the power supply and perform grounding of each electrode to enable discharge.** Otherwise, there is danger of death or injury due to electric shock.
DON'Ts	■**Do not solder connection lead wires directly to electrode terminals and do not wind bare wires around electrode terminals.** The connection sections become hot, and there is danger of fire, electric shock and burns. ■**Do not look into the waveguide, the antenna, or the edge section of the co-axial cable during operation.** Doing so may result in loss of eyesight due to exposure of the eyes to high-frequency electromagnetic waves. ■**Persons with cardiac pacemakers must not engage in manufacturing, operation, or preventive maintenance of the equipment.** There is danger of abnormal operation of cardiac pacemakers.

	⚠ CAUTION
DON'Ts	■**Do not lift or carry objects with a weight of more than 20 kg on your own.** Otherwise, there is danger of back injury during lifting or injury due to falling. During carrying-in and installation, use suitable lifting / carrying-in equipment or enlist the help of others when carrying heavy objects. ■**Do not drop the equipment or subject it to shocks.** The electron tube may break or explode and there is danger of injury. Wear gloves and a protective mask during carrying-in and installation. When the electron tube is disposed of, inform the disposal technicians of the danger of explosion. ■**Do not touch the main body or peripheral parts during operation or, immediately after operation is stopped.** There is danger of burns due to high temperatures.