WVS-TECHNOLOGY

WALTER V. STEINFELD, DIPL.-ING.

ROBERT-BOSCH-STR. 7 TEL.: +49 2150 - 91 28 10
D - 40668 MEERBUSCH FAX: +49 2150 - 91 28 11

VHF TETRODE — 7F71RA

PEAK-OF-SYNC OUTPUT POWER IN COMBINED AMPLIFICATION: 1.36 KW
PEAK-OF-SYNC OUTPUT POWER IN VISION CARRIER AMPLIFICATION: 2.72 KW

GENERAL CHARACTERISTICS

Cathode	Thoriated tungsten
Heating	Direct, DC single phase AC
Filament voltage	4V ±5%
Filament current	78A
Interelectrode capacitances, approx.:	
Cathode-control grid	54pF
Control grid-screen grid	95 pF
Screen grid-anode	14 pF
Transconductance (Ia=1.6A, Ug2=500V)	70mA/V
Internal amplification factor, average	11
Operating position	Vertical, anode up or down
Weight, approx.	2.7 kg
Dimensions	See page 95
Anode cooling(1)	Forced air
Air flow, min.	4500L/min
Air pressure, min.	400Pa
Temperature on tube surface, max.	250℃

(1) Values for cooling given for maximum anode dissipation

TYPICAL OPERATION

		Combined Service	Vision only
Frequency	[MHz]	220	220
Peak-of-sync output power	[kW]	1.36	2.72
Bandwidth(-1dB)	[MHz]	8	6
Gain	[dB]	15	15
Anode voltage	[kV]	2.5	3.0
Control-grid bias voltage	[V]	-40	-40
Screen-grid voltage	[V]	500	500
Anode current(with signal)	[A]	1.11	1.6
Anode current(at zero signal)	[A]	0.5	0.5

MAXIMUM RATINGS

Frequency	250MHz
Anode voltage	5kV
Anode current	2.4A
Control-grid voltage	-500V
Screen-grid voltage	1kV
Anode dissipation	3.5kW
Control-grid dissipation	20W
Screen-grid dissipation	50W

WVS-TECHNOLOGY

WVS-TECHNOLOGY

WALTER V. STEINFELD, DIPL.-ING.
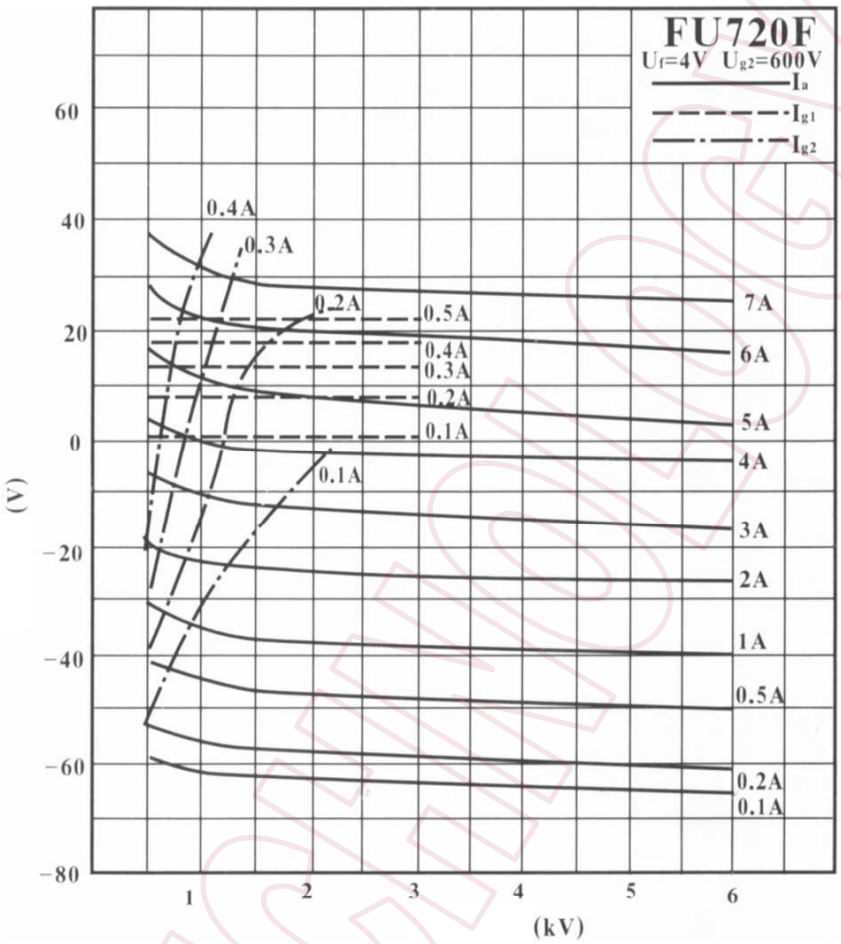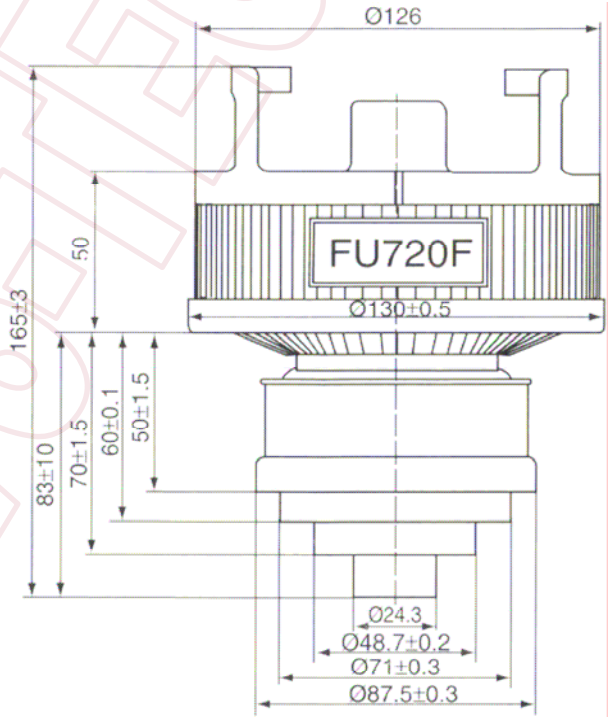
ROBERT-BOSCH-STR. 7 TEL.: +49 2150 - 91 28 10
D - 40668 MEERBUSCH FAX: +49 2150 - 91 28 11