WVS-TECHNOLOGY

WALTER V. STEINFELD, DIPL.-ING.

ROBERT-BOSCH-STR. 7 TEL.: +49 2150 - 91 28 10
D - 40668 MEERBUSCH FAX: +49 2150 - 91 28 11

UHF TETRODE 1410

PEAK-OF-SYNC OUTPUT POWER IN COMBINED AMPLITICATION: 1.1 KW
OUTPUT POWER IN SOUND CARRIER AMPLIFICATION: 2.3 KW

GENERAL CHARACTERISTICS	
Cathode	Oxide
Heating	Indirect
Filament voltage	3.8V
Filament current	20.5A
Interelectrode capacitances, approx:	
Cathode-control grid	42pF
Cathode-screen grid	2.2pF
Cathode-anode	0.005pF
Cathode grid-screen grid	60pF
Cathode grid-anode	0.05pF
Screen-grid-anode	8.2pF
Transconductance (Ia=0.5A, Ug2=500V, Ua=3kV)	55mA/V
Internal amplification factor, average	11
Operating position	Any
Weight, approx	1.1kg
Dimensions	See page 94
Anode cooling[1]	Forced air
Air flow, min,	2100L/min
Corresponding pressure drop	220℃
Temperature at air outlet, max,	100℃
Cooling at the sealing between electrode terminal and ceramic	Forced air
Temperature on tube surface, max,	250℃
[1] Values for cooling given for maximum anode dissipation	

MAXIMUM RATINGS	
Frequency	1215MHz
Anode voltage(bandIII)	4.2V
Anode current	1, 2A
Control-grid voltage	-100W
Screen-grid voltage	650V
Anode dissipation	2kW
Control-grid dissipation	5W
Screen -grid dissipation	30W

WVS-TECHNOLOGY

WALTER V. STEINFELD, DIPL.-ING.
ROBERT-BOSCH-STR. 7 TEL.: +49 2150 - 91 28 10
D - 40668 MEERBUSCH FAX: +49 2150 - 91 28 11

TYPICAL OPERATION
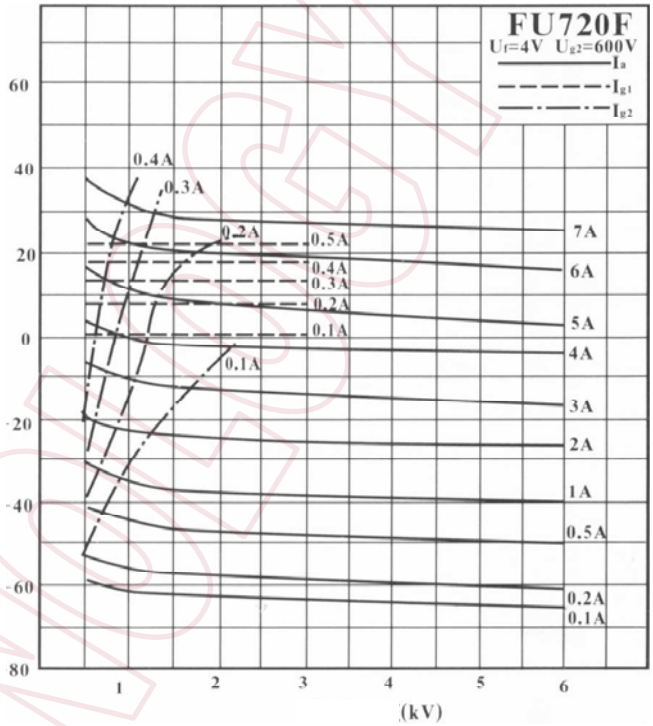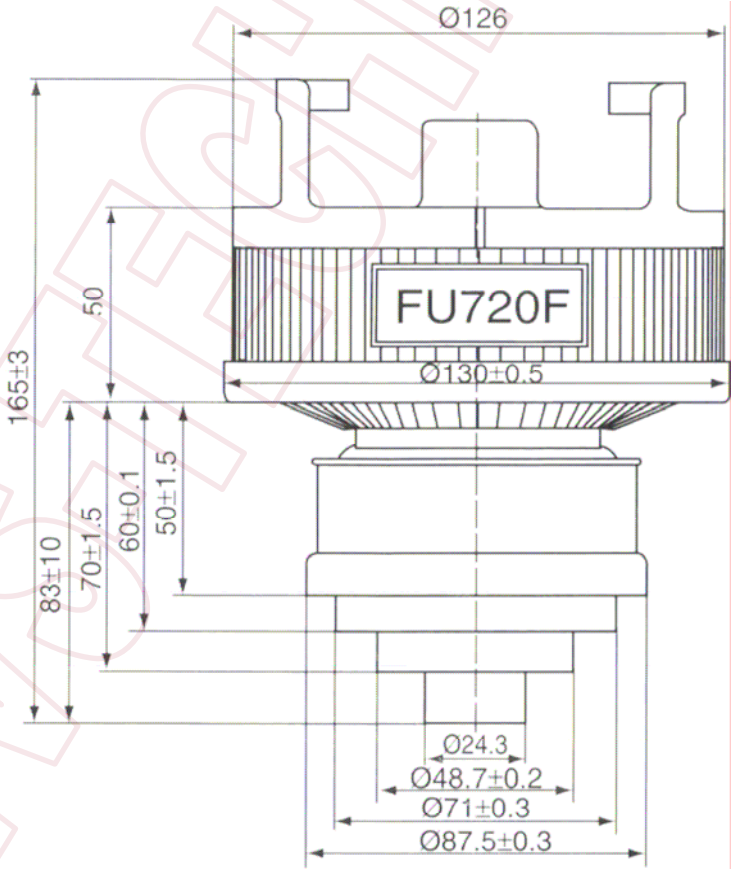
		Combined Service	Sound only
Frequency	[MHz]	600-860	600-860
Peak-of-sync output power	[kW]	1.1	1.3
Bandwidth (-1dB)	[MHz]	8	6 (-3dB)
Intermodulation distortion	[dB]	⩽-47	-
Gain	[dB]	⩾16.5	⩾17.5
Anode voltage	[KV]	3.4	3.4
Screen-grid voltage	[V]	600	600
Anode current (with signal)	[mA]	750	900
Anode current (at zero signal)	[mA]	500	450
Screen-grid current	[mA]	15	22