WVS-TECHNOLOGY

WALTER V. STEINFELD, DIPL.-ING.

ROBERT-BOSCH-STR. 7 TEL.: +49 2150 - 91 28 10
D - 40668 MEERBUSCH FAX: +49 2150 - 91 28 11

VHF TRIODE — 3CX3000A7

OUTPUT POWER: 5.5 KW

GENERAL CHARACTERISTICS

Cathode	Thoriated tungsten
Heating	Direct
Filament voltage	7.5±0.37V
Filament current	51.5A
Interelectrode capacitances (grounded cathode), approx.:	
Input	38.0pF
Output	0.6 pF
Feed-through	24.0 pF
Transconductance	55mA/V
Amplification factor, average	160
Operating position	Vertical, anode up or down
Weight, approx.	2.8 Kg
Dimensions	See page 95
Anode cooling	Forced air
Temperature on the surface of the tube, max.	250℃

MAXIMUM RATINGS

Frequency	110MHz
Anode voltage	5kV
Anode current	2.5A
Anode dissipation	4kW
Grid dissipation	225W

TYPICAL OPERATION

	RF power amplifier	
Example	**1**	**2**
Out power (approx) KW	5.5	6.25
Anode DC voltage KV	5.0	13.7
Grid DC voltage V	-240	-125
Anode DC current A	1.25	0.53
Grid current A	0.8	0.6

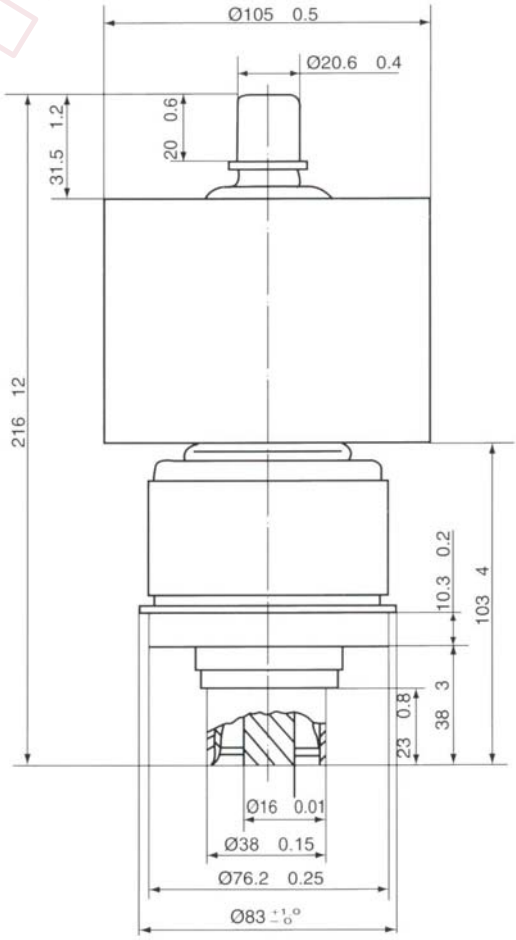

WVS-TECHNOLOGY

WALTER V. STEINFELD, DIPL.-ING.
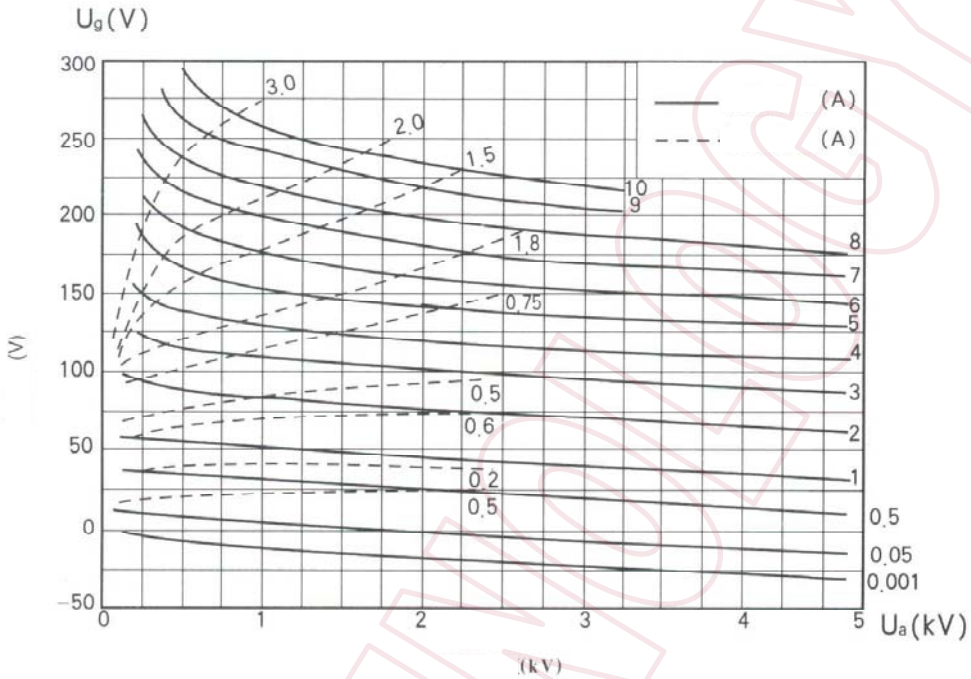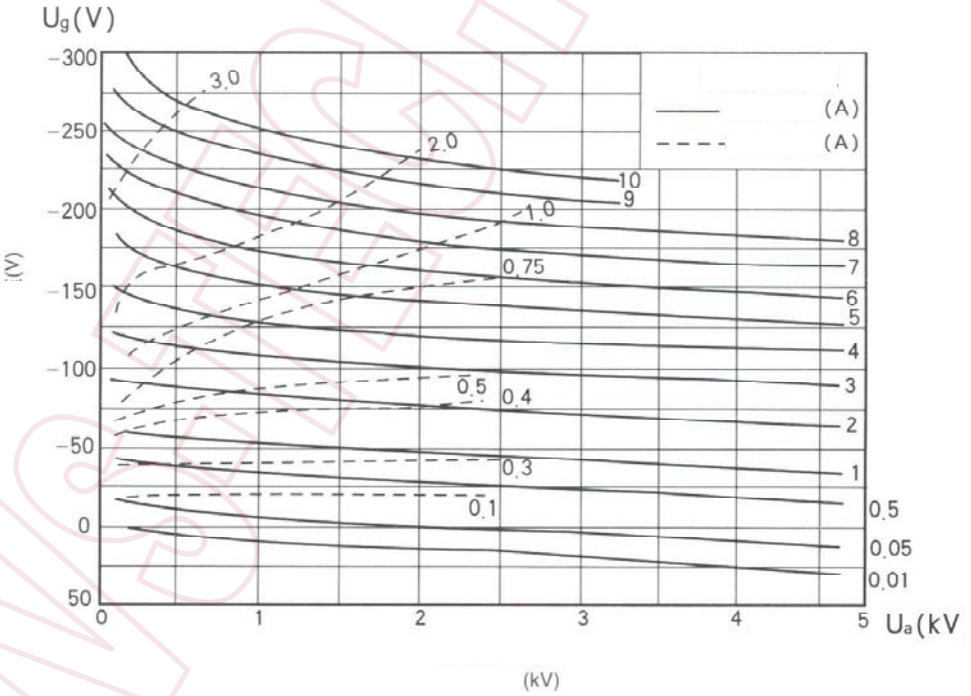
ROBERT-BOSCH-STR. 7 TEL.: +49 2150 - 91 28 10
D - 40668 MEERBUSCH FAX: +49 2150 - 91 28 11